NOTES:
1. MATERIAL: BLACK MATTE ANODIZED ALUMINUM
2. RoHS: COMPLIANT

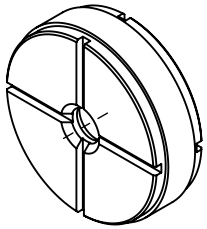

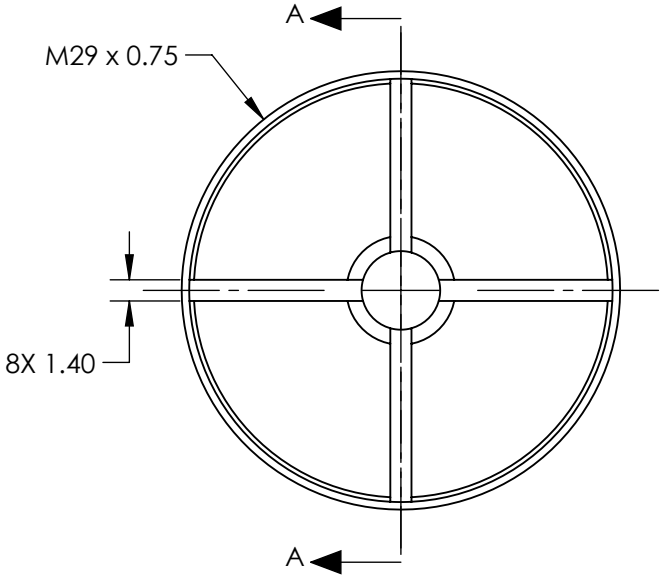

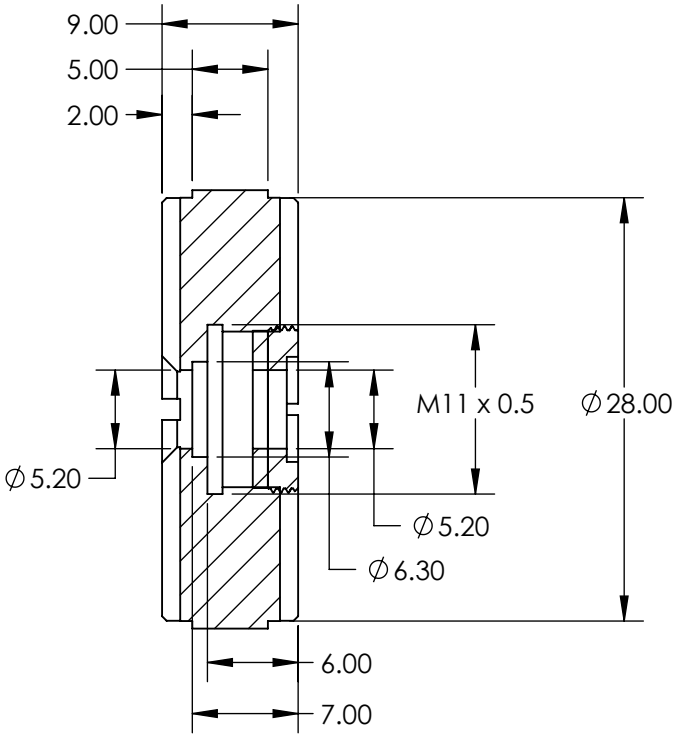

SECTION A-A

SPECIFICATIONS SUBJECT TO CHANGE WITHOUT NOTICE
DIMENSIONS ARE FOR REFERENCE ONLY

FOR INFORMATION ONLY:
DO NOT MANUFACTURE PARTS TO THIS DRAWING

Edmund Optics®

THIRD ANGLE PROJECTION		TITLE	M29 TUBE 6.25S	
ALL DIMS IN	mm	DWG NO	38746	SHEET 1 OF 1