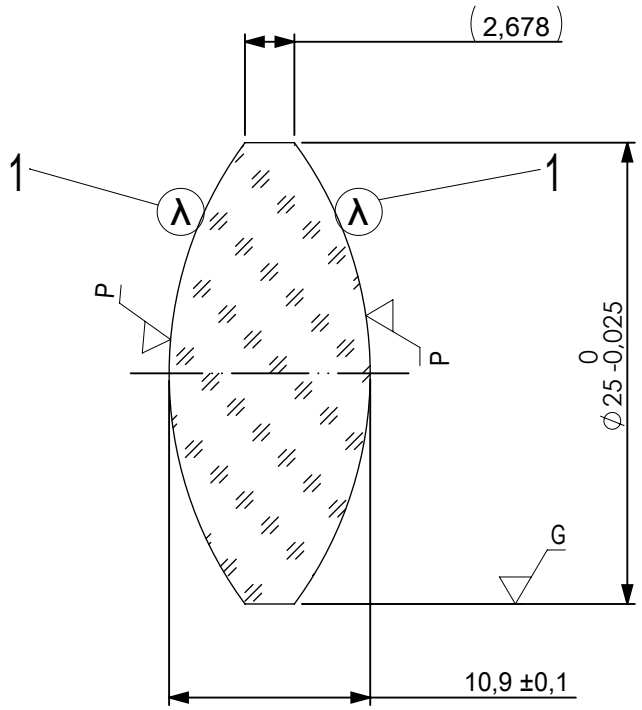

FOCAL LENGTH (EFL): 25 ±0,25

BACK FOCAL LENGTH (BFL): 20,93

1 AR COATING: NONE

LEFT SURFACE	MATERIAL	RIGHT SURFACE
R 21,06±0,021 CX	GLASS FUSED SILICA 458/678	R 21,06±0,021 CX
Øe 24		Øe 24
3/ 3 (0,5) λ=632,8 nm		3/ 3 (0,5) λ=632,8 nm
4/ -		4/ 2,18'
5/ 40 - 20 (MIL-PRF-13830B)		5/ 40 - 20 (MIL-PRF-13830B)
6/ -		6/ -

PROTECTIVE CHAMFERS AS NEEDED	FIRST ANGLE PROJECTION	Edmund Optics®
ROHS: COMPLIANT / SCALE: NONE / λ = 587,6nm		
SPECIFICATIONS SUBJECT TO CHANGE WITHOUT NOTICE. DIMENSIONS ARE FOR REFERENCE ONLY		TITLE: 25mm Dia, x 25mm FL, Uncoated, UV Double-Convex Lens
FOR INFORMATION ONLY: DO NOT MANUFACTURE PARTS TO THIS DRAWING	ALL DIMS IN: mm	
INDICATIONS IN ACCORDANCE WITH ISO 10110		DWG NO: 48293 / SHEET SIZE: A4 / SHEET 1 OF 1