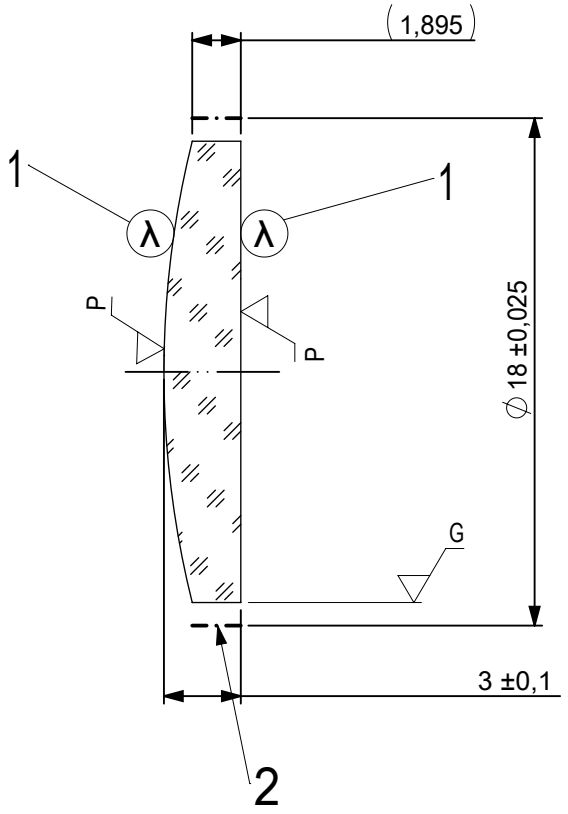

FOCAL LENGTH (EFL): 72 ±0,72

BACK FOCAL LENGTH (BFL): 70,05

1 AR COATING: VIS-EXT
R(AVG) ≤ 0,5% FROM 350-700nm @ 0° AOI

2 BLACKENED SURFACE

LEFT SURFACE		MATERIAL	RIGHT SURFACE	
R	37,22±0,037 CX	GLASS N-BK7 517/642	R	∞ PL
Øe	17		Øe	17
3/	3 (0,5) λ=632,8 nm		3/	3 (0,5) λ=632,8 nm
4/	-		4/	1,93'
5/	40 - 20 (MIL-PRF-13830B)		5/	40 - 20 (MIL-PRF-13830B)
6/	-		6/	-

PROTECTIVE CHAMFERS AS NEEDED

ROHS: COMPLIANT | SCALE: NONE | λ = 587,6nm

SPECIFICATIONS SUBJECT TO CHANGE WITHOUT NOTICE. DIMENSIONS ARE FOR REFERENCE ONLY

FOR INFORMATION ONLY: DO NOT MANUFACTURE PARTS TO THIS DRAWING

INDICATIONS IN ACCORDANCE WITH ISO 10110

FIRST ANGLE PROJECTION

ALL DIMS IN: mm

Edmund Optics®

TITLE: 18,0mm Dia, x 72,0mm FL, VIS-EXT, Inked, Plano-Convex Lens

DWG NO: 88708INK

SHEET SIZE: A4

SHEET 1 OF 1