PART	PART #	MATERIAL
1	#32-760	SCHOTT RG1000
2	#56-353	BLACK ANODIZED ALUMINUM

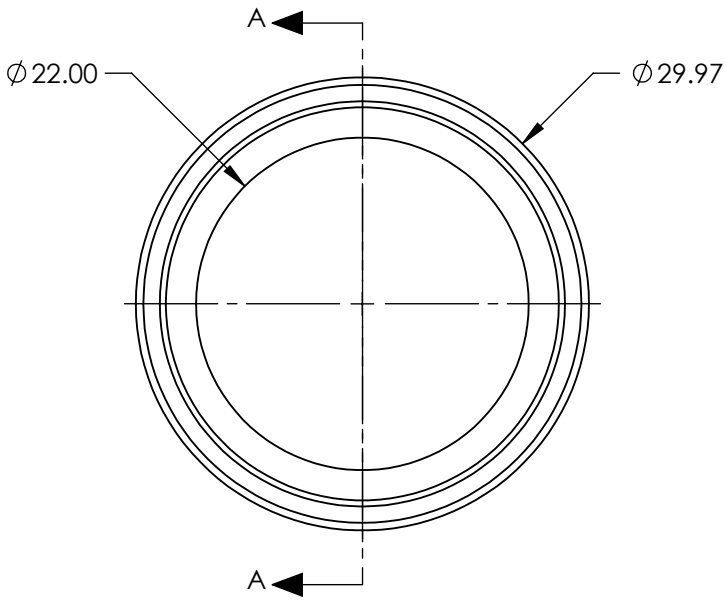

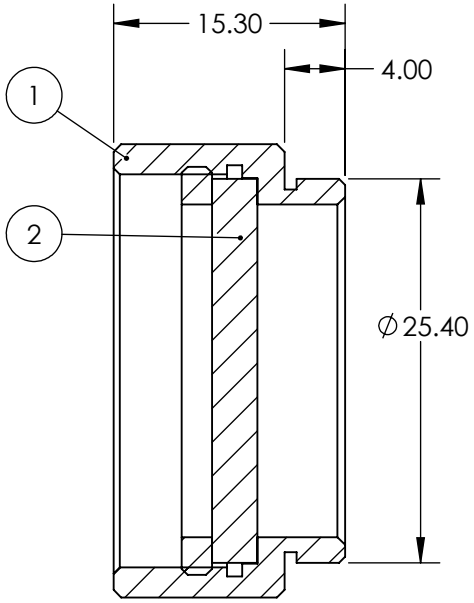

SECTION A-A

FOR INFORMATION ONLY:
DO NOT MANUFACTURE PARTS TO THIS DRAWING

SPECIFICATIONS SUBJECT TO CHANGE WITHOUT NOTICE
DIMENSIONS ARE FOR REFERENCE ONLY

SHAPE	PLANO
SPECTRAL TRANSMITTANCE (%)	90
PASSBAND LIMIT 1 (nm)	1300
CUT-OFF POSITION (nm)	1000±6
STOPBAND LIMIT (nm)	730
WAVELENGTH	IR

Edmund Optics®

THIRD ANGLE PROJECTION		TITLE	22mm CA, SCHOTT RG1000, C-Mount Longpass Glass Color Filter	
ALL DIMS IN	mm	DWG NO	13039	SHEET 1 OF 1