# 16.0mm FL, No IR-Cut Filter, f/2, Micro Video Lens

Stock **#64-108** **20+ In Stock**

Similar Products

- 1 + **€70**.00

**ADD TO CART**

| Volume Pricing | |
|---|---|
| Qty 1-49 | **€70,00** each |
| Qty 50+ | **€56,00** each |
| Need More? | Request Quote |

Prices shown are exclusive of VAT/local taxes

Product Downloads

## SPECIFICATIONS

### General

**Series:**
Long Working Distance Optimized Imaging Lenses

**Note:**

Standard

**Type:**
M12 Imaging Lens

**IR Cut Filter:**
No

## Physical & Mechanical Properties

**Iris Option:**
Fixed

**Length (mm):**
14.40

**Maximum Diameter (mm):**
14.0

**Outer Diameter (mm):**
14

## Optical Properties

**Horizontal Field of View @ Max Sensor Format:**
17

**Maximum Image Circle (mm):**
6.00

**Resolution, On-Axis:**
75 lp/mm @ 20% Contrast

**Resolution, 0.7 Field:**
65 lp/mm @ 20% Contrast

**Resolution, Full Field:**
60 lp/mm @ 20% Contrast

**Focal Length FL (mm):**
16.00

**Working Distance (mm):**
400 - ∞

**Aperture (f/#):**
f/2

**Distortion (%):**
-2.50 @ Full Field

**Maximum Distortion (%):**
-2.5

**Lens Wavelength Range:**
VIS

## Sensor

**Maximum Sensor Format:**
1/3"

**Pixel Size (µm):**
3.45

## Threading & Mounting

**Filter Thread:**
M12 x 0.50

**Mount:**
S-Mount (M12 x 0.5)

## Regulatory Compliance

**RoHS 2015:**
Exempt

**Certificate of Conformance:**
View

**Reach 242:**
Contains SVHC(s)

# PRODUCT DETAILS

- Up to 2/3", S-Mount Lens
- Wide Field of View Board Camera Lens
- 1.68mm to 50mm Focal Length

Long Working Distance Optimized Imaging Lenses are designed for use in micro sensor board cameras. These lenses provide excellent image quality in a small, versatile package. Optimized to cover 2/3" sensor formats, they are an ideal choice for wide angle and close focus applications. Long Working Distance Optimized Imaging Lenses have 1.68 to 50mm focal lengths. All lenses are threaded for M12 x 0.5. Some models with Back Focal Distances (dimension "C") less than 4mm may be incompatible with some color cameras due to the camera's Bayer filter. We recommend such lenses for use with monochrome cameras only. Lenses are designed for the 400nm to 700nm range.

**Note:** A line of M12 Imaging Lens Accessories is available for these products.

# TECHNICAL INFORMATION

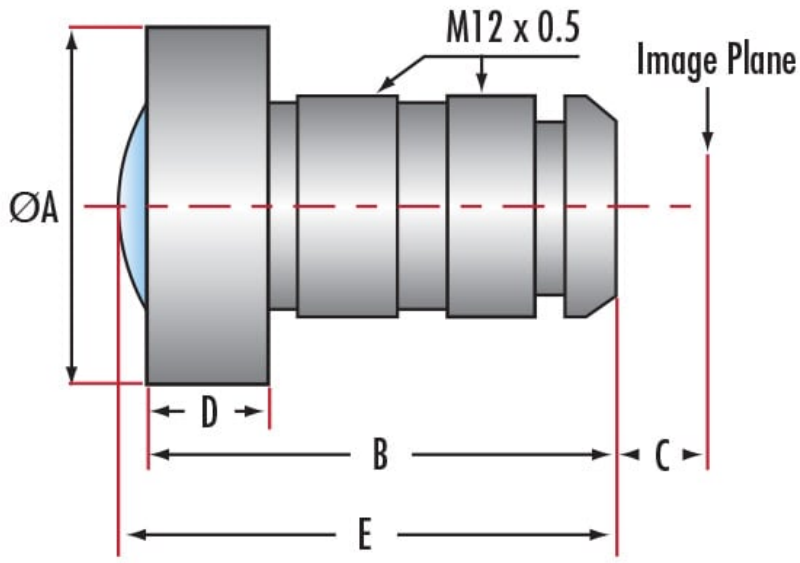


*Infinite Conjugate M12 Imaging Lenses*

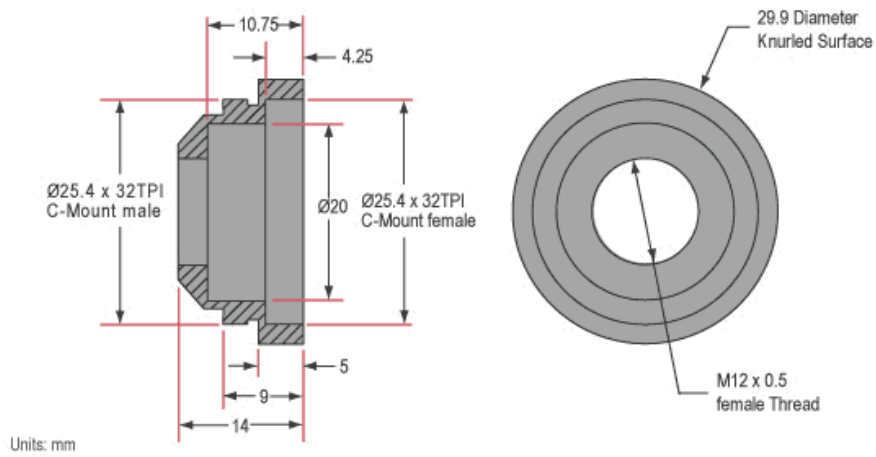


*C-Mount Adapter (#53-675)*

| Stock # | | Focal Length (mm) | Aperture (f/#) | A (mm) | B (mm) | C (mm) | D (mm) | E (mm) |
|---|---|---|---|---|---|---|---|---|
| No-IR Cut Filter | IR Cut Filter @650nm | | | | | | | |
| #59-776 | #66-880 | 1.68 | 2.5 | 15.0 | 13.2 | 3.3 | 2.8 | 15.1 |
| #56-774 | #66-881** | 1.74 | 2.8 | 21.0 | 19.61 | 3.33 | 3.2 | N/A |
| #64-106 | - | 1.9 | 2.0 | 17.0 | 14.58 | 4.2 | 4.0 | 15.24 |
| #55-569 | #66-883 | 2.1 | 2.0 | 17.0 | 18.3 | 4.8 | 3.7 | 19.4 |
| #57-681 | #66-884*** | 2.5 | 2.5 | 17.0 | 19.1 | 4.4 | 3.7 | 20.3 |
| #55-570 | #66-885 | 2.9 | 2.0 | 15.0 | 17.4 | 5.2 | 5.8 | 17.8 |
| #59-778 | #66-886 | 3.0 | 2.0 | 14.0 | 15.3 | 5.3 | 3.9 | N/A |
| #57-684 | #66-890 | 6.05 | 1.8 | 15.0 | 15.6 | 8.0 | 6.0 | N/A |
| #55-573 | #66-891 | 6.37 | 2.4 | 14.8 | 13.12 | 5.3 | 3.3 | N/A |
| #55-574 | #66-892 | 8.0 | 2.5 | 15.0 | 13.5 | 5.8 | 3.0 | N/A |
| #63-762 | #59-779 | 10.1 | 2.8 | 15.0 | 13.4 | 6.1 | 3.2 | N/A |
| #65-251 | #64-107 | 10.4 | 2.8 | 14.0 | 8.93 | 6.4 | 4.0 | N/A |
| #56-775 | #66-893 | 12.0 | 2.0 | 14.0 | 12.1 | 6.2 | 4.0 | N/A |
| #64-108 | #66-894 | 16.0 | 2.0 | 14.0 | 14.4 | 8.0 | 4.5 | N/A |
| #83-107 | - | 16.0 | 4.0 | 14.0 | 14.4 | 8.0 | 4.5 | N/A |
| #56-776 | #66-895 | 25.0 | 2.5 | 25.0 | 23.2 | 8.1 | 6.7 | N/A |
| #59-780 | #66-896 | 35.0 | 2.0 | 25.0 | 23.4 | 15.8* | 6.0 | N/A |
| #59-781 | #66-897 | 50.0 | 2.5 | 27.0 | 52.8 | 4.1 | 8.0 | N/A |

***Note:** 35.0mm lens has a large flange focal length. Please make proper adjustments when mounting.
**#66-881, B(mm): 20.49
***#66-884, B(mm): 19.8, E(mm): 21

| Stock # | Focal Length (mm) | Aperture (f/#) | A (mm) | B (mm) | C (mm) | D (mm) | E (mm) |
|---|---|---|---|---|---|---|---|
| #88-587 | 3.0 | 2.0 | 15.0 | 15.35 | 5.2 | 4 | 16 |
| #88-588 | 3.5 | 2.5 | 15.0 | 15.4 | 6.9 | 4 | N/A |
| #11-323 | 3.7 | 1.6 | 19 | 24.04 | 5.46 | 6.5 | 24.16 |
| #11-324 | 4.0 | 1.8 | 20 | 23.8 | 5.01 | 7 | 24.72 |
| #88-589 | 4.0 | 2.0 | 15.0 | 16.1 | 5.9 | 3.8 | N/A |
| #88-590 | 4.3 | 2.0 | 22.0 | 20.96 | 5.5 | 6 | 21.93 |
| #11-325 | 4.6 | 1.6 | 19 | 24.18 | 5.44 | 7 | 24.32 |
| #88-591 | 4.6 | 2.0 | 12.0 | 13.1 | 1.9 | 6 | N/A |

| | | | | | | | |
|---|---|---|---|---|---|---|---|
| #88-592 | 5.6 | 2.0 | 17.0 | 22.21 | 5.3 | 5 | 22.38 |
| #89-750 | 6.0 | 2.0 | 14.0 | 15.1 | 6.7 | 3.93 | N/A |
| #11-326 | 7.0 | 1.6 | 19 | 25.24 | 5.47 | 7.2 | 24.2 |
| #89-751 | 8.0 | 2.0 | 15.0 | 14.4 | 6.8 | 4.5 | N/A |
| #89-752 | 12.0 | 2.0 | 15.0 | 14.3 | 5.7 | 4.5 | N/A |