TECHSPEC® 6mm Diameter, C-Mount Thin Optic Mount

Stock **#54-613** **10 In Stock**

- 1 + €59.50

ADD TO CART

Volume Pricing	
Qty 1-4	**€59,50** each
Qty 5-9	**€52,90** each
Qty 10-25	**€49,10** each
Need More?	Request Quote

Prices shown are exclusive of VAT/local taxes

Product Downloads

SPECIFICATIONS

General

Type:
Fixed

Type of Optics:
Circular

Function:
Optic Mount (Fixed)

Physical & Mechanical Properties

Extension Length (mm):
5.6

Construction:
Black Anodized Aluminum (6061 T6)

Total Length (mm):
9.6

Outer Diameter (mm):
30.0

Clear Aperture CA (mm):
5.20

Max. Thickness of Compatible Optics (mm):
3.0

Min. Thickness of Compatible Optics (mm):
1.0

Threading & Mounting

Diameter of Compatible Optics (mm):
6.0

Thread Type:
C-Mount

Regulatory Compliance

RoHS 2015:
Compliant

Certificate of Conformance:
View

REACH 241:
Compliant

PRODUCT DETAILS

- Mounts for Simple Lenses, Achromats, Filters, or Reticles
- Designed to Integrate with Any C, S, or T-Mount Components
- Optic is Held in Place with Included Retaining Ring

TECHSPEC® C, S, and T-Mount Circular Optic Mounts are designed to mount a variety of circular optical components into C, S, or T-Mount compatible systems. An included threaded retainer ring, designed to accept a standard spanner wrench, securely holds the optical component. These circular optic mounts are compatible with a wide variety of Edmund Optics optomechanical components utilizing C, S, or T-Mount threads, such as **extension tubes** and **kinematic mounts**. TECHSPEC® C, S, and T-Mount Circular Optic Mounts are threaded for 1" x 32TPI, M12 x 0.5, or M42 x 0.75 mounting, with 30mm, 16mm, and 48mm outer diameters, respectively. These mounts are ideal for creating and personalization of a diverse range of optical systems.

Note: **#56-353**, **#56-354**, **#52-933**, and **#52-292** are all 3-part assemblies

TECHNICAL INFORMATION
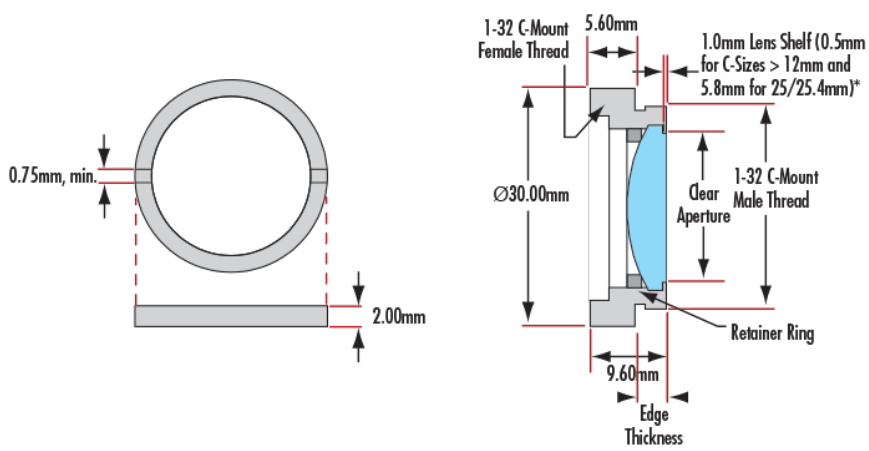
C-Thread Simple / Thin Lens Mount