See all 20 Products in Family

Brightfield Motorized Turret for Mitutoyo Widefield Video Microscope Unit

See More by Mitutoyo

#89-622 + Objective

+4

Stock **#71-012** CONTACT US

- 1 + €5.990.00

ADD TO CART

Volume Pricing	
Qty 1+	**€5.990,00** each
Need More?	Request Quote

Prices shown are exclusive of VAT/local taxes

Product Downloads

General

Model Number:
378-726-11

Manufacturer:
Mitutoyo

Compatible Objectives:
378-515, 378-516, 378-517, 378-518

Physical & Mechanical Properties

Weight (g):
825

Regulatory Compliance

Certificate of Conformance:	REACH 241:
View	Contains SVHC(s)

Product Details

- Designed for M26 x 36 TPI or M40 x 36 TPI **Infinity Corrected Objectives**
- Maximum Sensor Size up to 2/3" or APS-C
- Vertical and Horizontal Orientations, Brightfield and Darkfield Configurations Available
- In-Line Fiber Illumination Port Compatible with 8mm or 1/4" (0.312") Diameter Ferrules

The Mitutoyo Video Microscope Units (VMU) are used to connect **infinity corrected objectives** to a **C-mount or F-mount camera** for quick and easy setup of microscopy systems. Providing 1X magnification, the Mitutoyo Video Microscope Unit (VMU) features an in-line illumination port for maximum contrast and simple illumination compared to epi-illumination techniques. The Brightfield VMU configurations are fitted with an adjustable iris to control light throughput without adjusting camera shutter or gain.

The Mitutoyo VMU is available in standard (for 2/3" format sensors) and widefield (for APS-C format sensors) with options for the camera port to be oriented at 90 or 180 degrees with respect to the objective. In addition to broadband versions, the VMU is also available in a specialized Nd:YAG Laser Line configuration, supporting 355, 532, and 1064nm lasers, as well as versions specifically designed for Darkfield Microscopy. Mitutoyo Video Microscope Units (VMU) utilize optics optimized for the NUV, VIS, or NIR spectra, making them ideal and directly compatible with a wide selection of **Mitutoyo infinity corrected objectives**.

Mitutoyo Manual Turrets are available for each VMU configuration. They feature four objective mounts which enable quick transition between multiple objectives of different magnifications. Pairing the turret with the VMU creates a flexible video imaging microscope system.

Technical Information

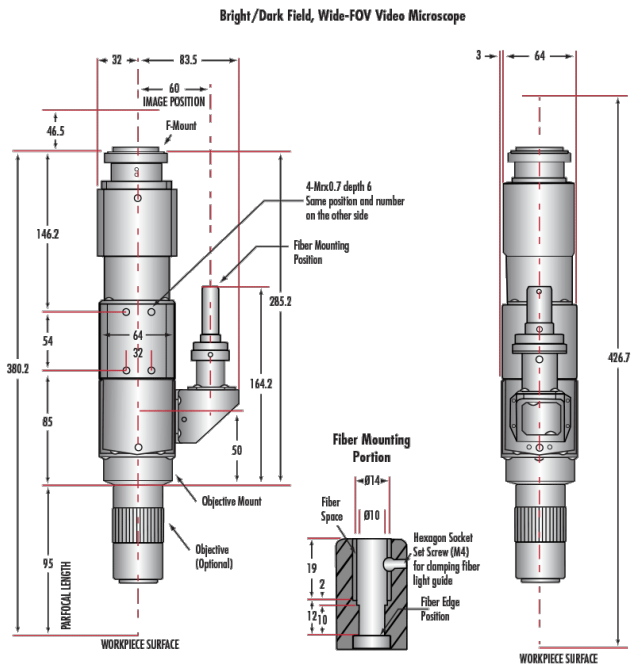

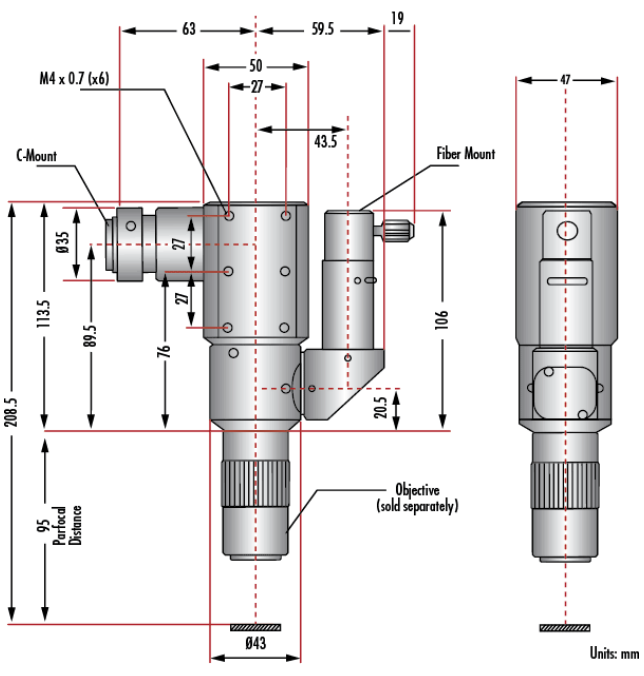

Vertical Laser Line VMU (#89-622)

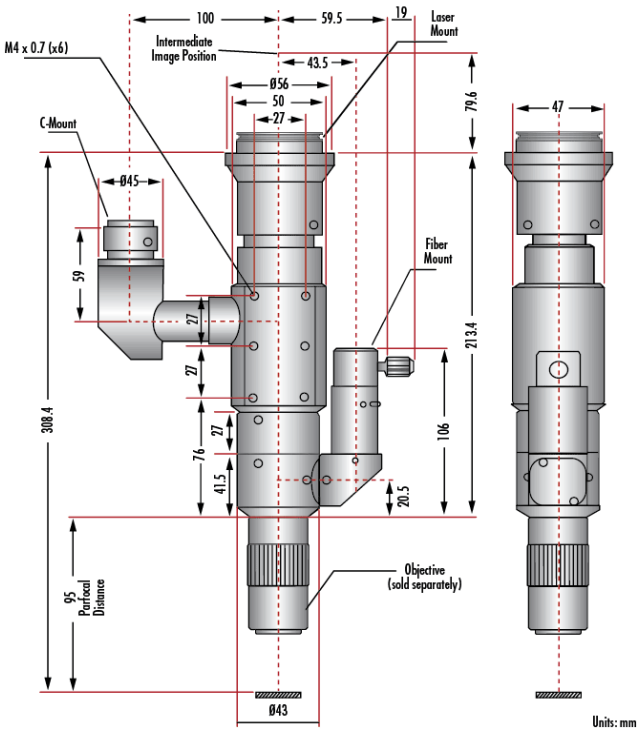

Vertical VIS-NIR VMU (#86-799)

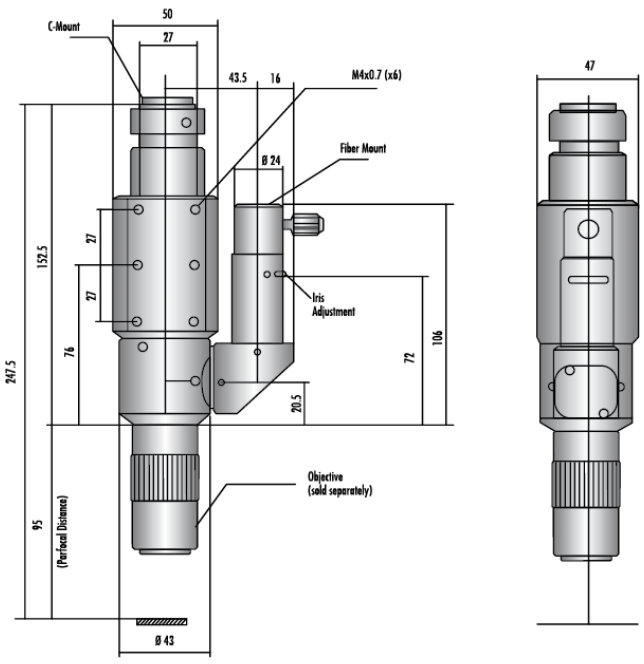

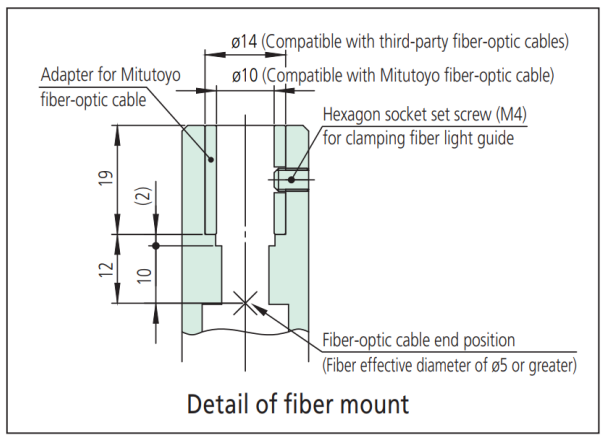

Detail of fiber mount

Mitutoyo Video Microscope Unit (VMU) and Mitutoyo Turret

Wavelength Range:	VIS-NIR		NUV-VIS-NIR Nd:YAG, 355/532/1064nm	VIS-NIR-SWIR Widefield Hi-Res	VIS Widefield BD	
Type:	Brightfield		Brightfield	Brightfield	Brightfield/Darkfield	
Orientation:	Vertical	Horizontal	Vertical	Vertical	Vertical	Horizontal
Model:	378-505	378-506	378-507	378-519	378-517	378-518
Tube Lens Magnification:	1X		1X	1X	1X	
Camera Mount:	C-Mount		C-Mount	F-Mount or C-Mount w/included adapter	F-Mount or C-Mount w/included adapter	
Objective Mount:	M26 x 36 TPI		M26 x 36 TPI	M26 x 36 TPI	M40 x 36 TPI	
Max. Sensor Format:	2/3"		2/3"	APS-C	APS-C	
Weight:	570g	590g	980g	1400g	2150g	
Stock Number:	#86-799	#89-621	#89-622	#23-338	#18-653	
Manual Turret (Four Objective Mounts):	#86-589		#86-589	#18-654	#18-655	
Compatible Objectives:	M Plan Apo/HR/SL and G Plan Apo		M Plan Apo/HR/SL and M Plan NIR/NUV	M Plan Apo/HR/SL G Plan Apo M Plan Apo NIR	BD Plan Apo	
VMU-L Laser Mount to C-Mount Adapter:	N/A		#37-044	N/A	N/A	

;